TSN Components and Devices Testing

Dave Cavalcanti, Intel Corporation
Ganesh Venkatesan, Intel Corporation
Alon Regev, Keysight
Ionel Ghita, Keysight
Richie Pearn, NXP Semiconductor
Jeremy Rover, Intel Corporation
Mark Geisler, Analog Devices
Samantha Jaramillo, Analog Devices
Genio Kronauer, L-Acoustics
Henning Kaltheuner, d&b audiotechnik
Gavin Lai, MOXA
Pekka Varis, Texas Instruments

RELIABLE SYNCHRONIZED NETWORKING

Abstract

This presentation provides an overview of the latest TSN components and device testing specifications, capabilities and certification programs in Avnu Alliance.

IEEE

IEEE 802.1 TSN TG

Base standards for TSN

Profile standards: IEEE 802.1BA (AVB), IEEE/IEC 60802, …

AVNU

Test Specifications (for TSN/AVB features)

Wired (Ethernet) and Wireless (Wi-Fi and 5G)

Test Tools and Test Lab Partners

Certification Programs

ProAV | Auto | Industrial | Other

MTSN

Avnu Certified Interoperable TSN-capable components and network devices

Converged Networks where different types of traffic (mixed criticality) coexist

Avnu Alliance is enabling an ecosystem of interoperable networked devices using TSN technologies that guarantee real-time applications will just work

Avnu Testing & Certification Programs

- Avnu (TSN Profile Agnostic) Component Certification (starting Q2 2024)
  - Ethernet TSN: Timing & Sync (.1AS), EST (802.1Qbv), IET/preemption (802.1Qbu), CBS (802.1Qav), …
- Avnu Network Device Certification (new - Q2 2024)
  - Base TSN capability + TSN Profile specific requirements
  - AVB/TSN Bridge programs: updating to streamline testing and certification

Focus of this presentation

- Other programs
  - Avnu Automotive Certification
    - 802.1DG
  - Milan Certification (ProAV specific)
    - Application layer network protocol for real-time media
  - TSN over Wireless (Wi-Fi and 5G): 802.1AS and 802.1Qbv (Rel. 1)

EST: Enhancements for Scheduled Traffic
IET: Interspersed Express Traffic
CBS: Credit Based Shaper

Base TSN Test Plans

- TSN Profile Agnostic test plans
  - 802.1AS
  - 802.1Qbv
  - 802.1Qbu
  - 802.1Qav
  - …

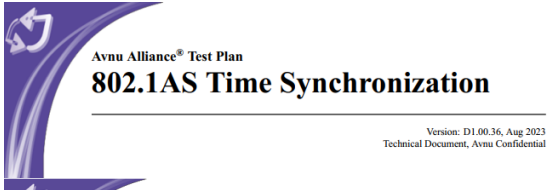
Avnu Alliance® Test Plan
802.1AS Time Synchronization
Version: D1.00.36, Aug 2023
Technical Document, Avnu Confidential


Avnu Alliance Profile Agnostic Conformance Test Plan for
Interspersed Express Traffic (IET)
IEEE802.1Qbu/.3br
Revision: 1.01

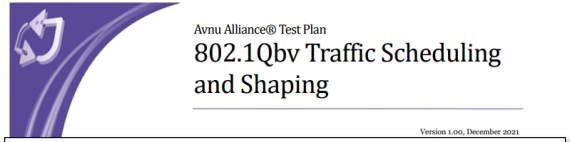
Avnu Alliance® Test Plan
802.1Qbv Traffic Scheduling and Shaping
Version 1.00, December 2021

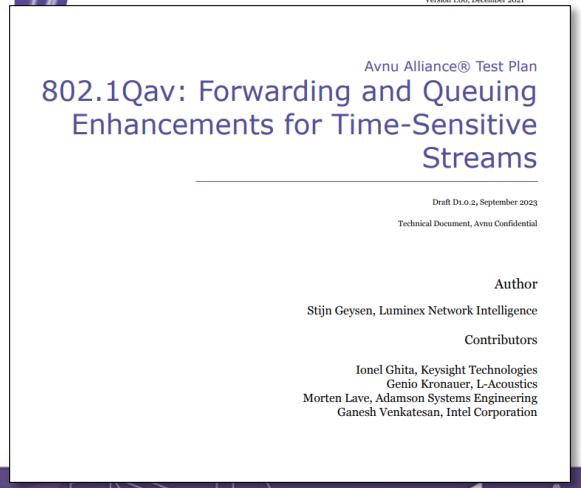
Avnu Alliance® Test Plan
802.1Qav: Forwarding and Queuing Enhancements for Time-Sensitive Streams
Draft D1.0.2, September 2023
Technical Document, Avnu Confidential
Author
Stijn Geysen, Luminex Network Intelligence
Contributors
Ionel Ghita, Keysight Technologies
Genio Kronauer, L-Acoustics
Morten Lave, Adamson Systems Engineering
Ganesh Venkatesan, Intel Corporation

802.1AS Testing

- Time synchronization test plan covers IEEE 802.1AS-2011 and 802.1AS-2020
  - Test cases for gPTP instances and gPTP instances with relay
  - Signaling message conformance
  - Conformance to 802.1AS state machines (BMCA, MDSyncSend, MDSyncReceive, MDPdelayReq)

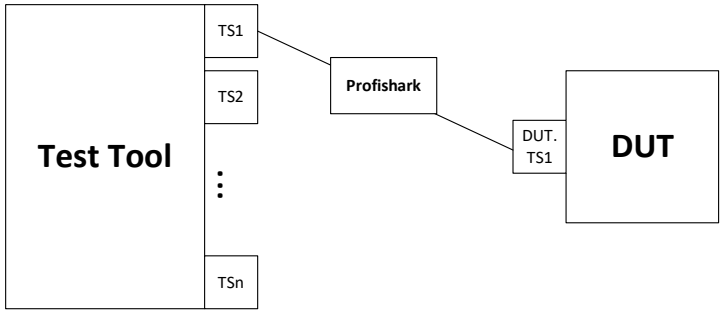

Test Setup for end stations

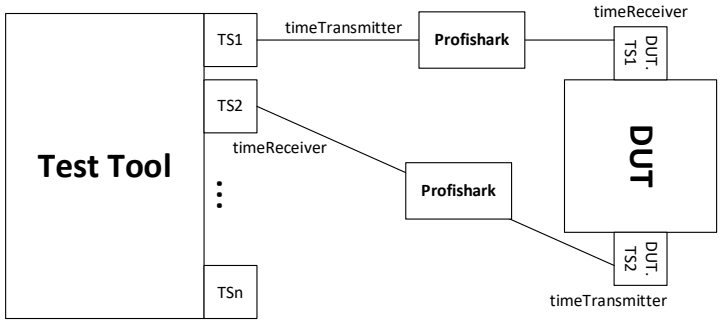

Test Setup for bridges

DUT: Device Under Test

820.1AS Testing Example (1)

- Media independent test to validate Announce Message

Pre-requisites	Applies to any gPTP device
Test requirements	TS capable of acting as traffic generator and monitor
Test procedure	• Start Pdelay emulation at TS 1 • Capture all Announce messages received at TS 1
Results	• PASS: Verify observed DA and EtherType are set as expected and reserved fields are set to zero (as specified in test procedure)

	bits 8 7 6 5 4 3 2 1		octets	offset
Ethernet Specific	DA=01-80-C2-00-00-0E		6	-14
	SA		6	-8
	Ethertype=0x887F		2	-2
802.1AS Message Header	majorSdoId=0x1 or 0x2	messageType	1	0
	minorVersionPTP=1	versionPTP	1	1
	messageLength		2	2
	domainNumber		1	4
	minorSdoId=0x00		1	5
	flags		2	6
	correctionField		8	8
	messageTypeSpecific=0xB		4	16
	sourcePortIdentity		10	20
	sequenceId		2	30
	control		1	32
	logMessageInterval		1	33
Announce Message	Reserved=0x00		10	34
	currentUtcOffset		2	44
	reserved		1	46
	grandmasterPriority1		1	47
	grandmasterClockQuality		4	48
	grandmasterPriority2		1	52
	grandmasterIdentity		8	53
	stepsRemoved		2	61
	timeSource		1	63
path trace TLV	tlvType = 0x0008		2	64
	lengthField = 0x0008 (N = 1)		2	66
	pathSequence		8N	68

820.1AS Testing Example (2)

- Media dependent test validate DUT's Follow_Up messages on Ethernet full-duple point-to-point link

Pre-requisites	Applies to any gPTP device
Test requirements	TS capable of acting as traffic generator and monitor
Test procedure	• Start Pdelay emulation and collect/check Follow_Up messages from DUT
Results	• PASS: Each follow up has correct body fields (as specified in test procedure)

Follow_Up message and Follow_Up TLV	bits 8 7 6 5 4 3 2 1	octets	offset
	preciseOriginTimestamp	10	34
	tlvType	2	44
	lengthField	2	46
	organizationId	3	48
	organizationSubType	3	51
	cumulativeScaledRateOffset	4	54
	gmTimeBaseIndicator	2	58
	lastGmPhaseChange	12	60
	scaledLastGmFreqChange	4	72

802.1Qbv Testing

- Test plan for 802.1Qbv covers
  - Transmission and Rejection of frames during queue gate operation
  - Queue cycle time conformance
  - Dynamic schedule changes
  - Bridges and Endpoints
  - Yang model validation
  - Test config over NETCONF

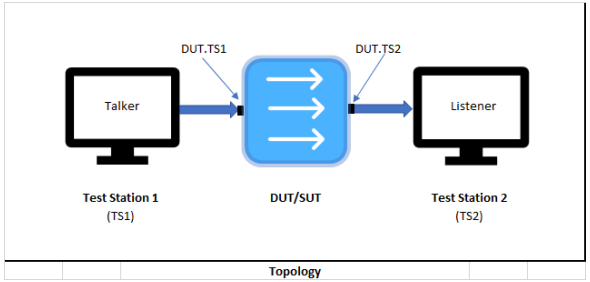

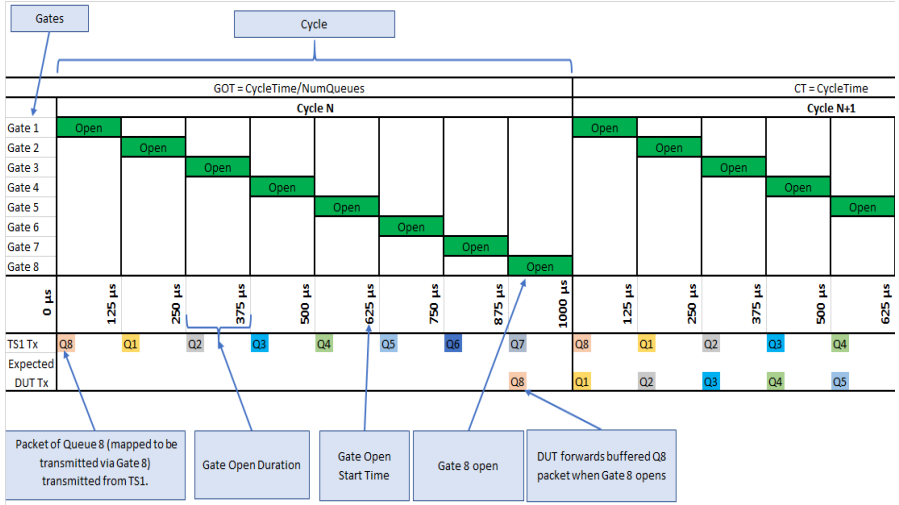

802.1Qbv Testing Example

- Transmission gate operation test to verify DUT maintains gate for each queue to allow/block traffic

Pre-requisites	Applies to bridge or end station
Test requirements	DUT passed 802.1AS validation Traffic generators and monitors
Test procedure	• Test transmission gate for each queue one traffic class at a time and all at once
Results	• PASS: all frames are received within the expect timing requirements (as defined in test procedure)

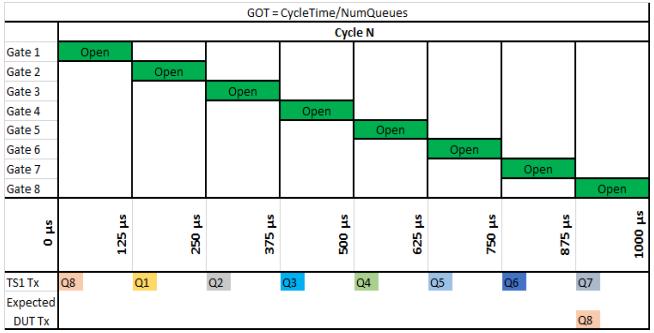

802.1Qbu Testing

- Preemption (802.1Qbu) test plan covers point-to-point full duplex links
  - Capability exchange (preemption-capable) using LLDP TLV
  - Transmission of express and preemptable frames (Tx tests)
  - Reception of express and preemptable frames (Rx tests)

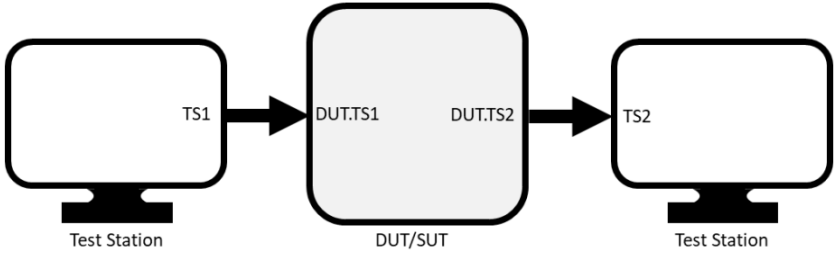

Bridge test set up

802.1Qbu Testing Example

- Validate ability of each DUT port to send and received LLDP messages indicating support for preemption and feature enabled

Pre-requisites	Applies to any device
Test requirements	Traffic generators and monitors
Test procedure	• Test exchange of additional Ethernet Capability TLV message using LLDP message
Results	• PASS: received LLDPU message contains expected TLV with preemption capability status set to 1.

802.1Qbu Testing Example

- Transmission of preemptable traffic, preempted by express traffic

Pre-requisites	Applies to any device
Test requirements	DUT capable of generating test traffic and Test Station as traffic monitor
Test procedure	• Start preemptable traffic, load eMAC service interface while pMAC is transmitting
Results	• PASS: correctly receive preemptable and express frames

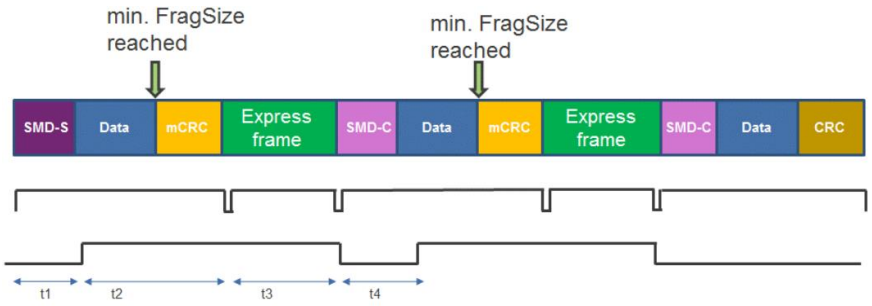

Avnu Network Device Testing and Certification

- Base TSN features (Component Test Plans)
  - e.g. FQTSS/Qav, gPTP tests
- Plus profile-specific tests
  - e.g. 802.1BA Bridge MVRP tests
  - e.g. IEEE/IEC 60802 Bridge CC-A/B supports ‘x’ Class Queues

Launching updated Bridge program in Q2 2024

Plugfests: Helping members develop, test and certify TSN-based interoperable devices

Plugfests running since 2019

Last Plugfest (Oct'23, Stuttgart)

- ~21 Member Companies
- ~36 Devices tested
- Features covered: 802.1AS, 802.1Qbv, 802.1Qbu, 802.1Qav, Wireless TSN (5G and Wi-Fi), MILAN and Switches

Next Plugfest events:

- April 1- 5, Malaga, Spain (5G only)
- April'24, Krakow, Poland (Ethernet and Wi-Fi)

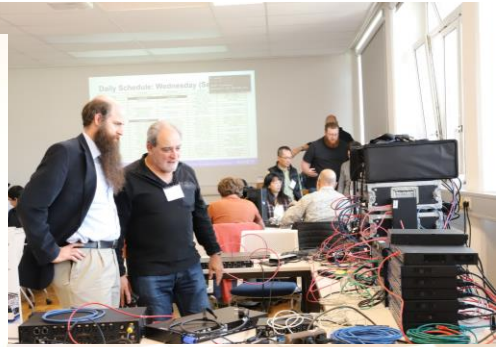

Test Tools for core TSN capabilities required by IEC/IEEE 60802 and other markets

Available Test tools	Avnu TSN Test Capabilities
Avnu Express Test Suite (AETS)	• Time Synchronization (802.1AS-2011 and 802.1AS-2020) • Milan Certification (802.1BA-2011, 802.1AS-2011, 1722.1, 802.1Q-2014, etc.) • Avnu .1BA Switch
Keysight Test tools for (Ethernet, Wi-Fi and 5G)	• Time Synchronization (802.1AS-2011 and 802.1AS-2020) • Enhancements for Scheduled Traffic (802.1Qbv) • Interspersed Express Traffic (.1Qbu/.3br) • Credit-based Traffic Shaping (.1Qav) • Wireless TSN (Wi-Fi and 5G): 802.1AS-2020 and 802.1Qbv • Avnu .1BA Bridge
Other vendors developing test tools: Spirent	

- Avnu-approved test tools are used in the certification programs to verify conformance with TSN standards
- Avnu members can use the tools to support their in-house development and during Plugfests.
- Avnu's Certification Policy defines and executes a rigorous test tool V&V process

Product testing performed by Avnu Registered Test labs

- Allion Labs
- Granite River Labs
- Excelfore
- IOL

Testing TSN for Industrial Automation

- TIACC is not a new org
  - Multi-org collaboration
- Goal is to work together on how to test and enable the TSN ecosystem for industrial automation
- Primary deliverable is a shared test plan for 60802

TSN feature/Test Plan	Status (Q1 2024)	Is feature a 60802 Requirement?
802.1AS	802.1AS-2011 & 2020 Test plan (Rev. 1.0) completed	Yes
802.1Qbv	802.1Qbv Test Plan (Rev.1.0) completed	Yes
802.1Qbu	802.1Qbu and .3br Test plan Rev. 1.01 completed	Yes
802.1Qav	802.1Qav Test Plan (Rev.1.0.1 completed)	Optional

www.tiacc.net/

Wireless (Wi-Fi and 5G) TSN Testing

- Test plans (Rel.1) covering 802.1AS and 802.1Qbv over 802.11/Wi-Fi and 5G

802.11 (Wi-Fi)

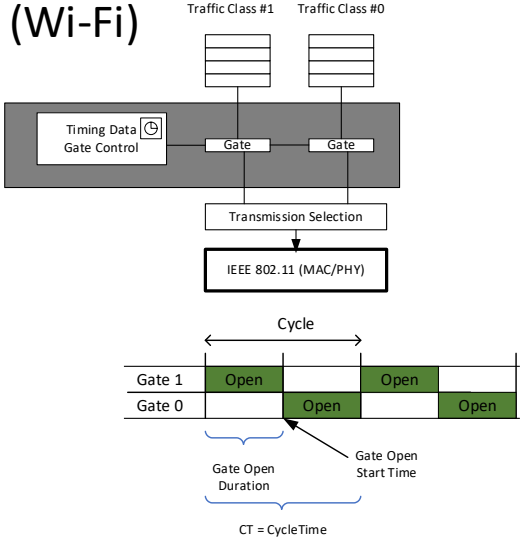

5G System

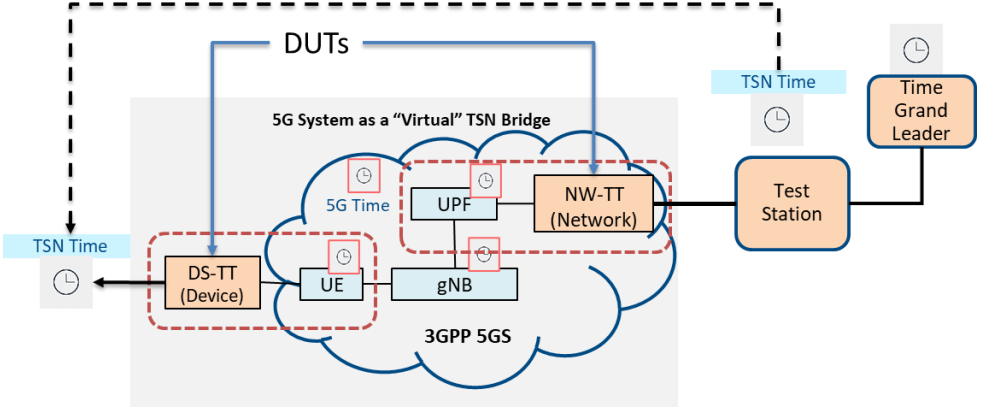

- Rel.2 tests under development: mobility/roaming, configuration and redundancy

Conclusions

- Avnu testing and certification programs are covering TSN components and network devices
  - 802.1AS, 802.1Qbv, 802.1Qav, 802.1Qbu, …
  - Testing coverage includes core requirements of the TSN Industrial profile (60802)
  - Testing framework and process including multiple test tools validation
  - Multiple devices/vendors contributing to testing through plugfest/interop events
- Avnu is addressing fundamental TSN capabilities for multiple markets (Industrial, Automotive, ProAV, …)
  - Closely following the IEEE 802.1 TG progress and new capabilities
  - Avnu members plan to continue reaching out to 802.1 to provide feedback and ask for clarification as testing progresses

Thank you!

Applications (mixed criticality) coexisting

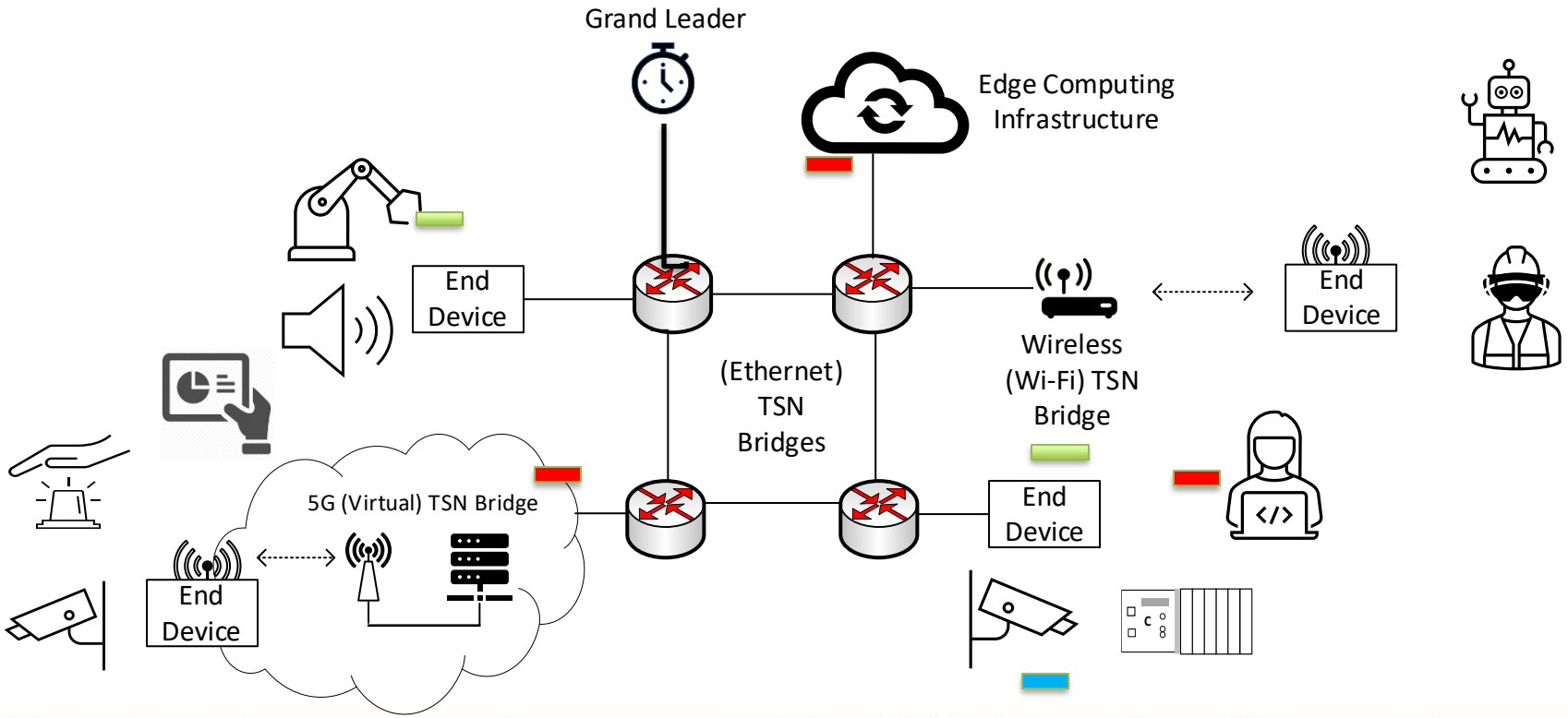

One TSN for wired and wireless networks serving multiple Markets